PART NO. DCAE-165

	DIM. W	DIM. X	DIM. Y
WITH 3.875(98.4) LONG CAPACITOR	1.453-1.703 / 36.9-43.3	4.078-4.141 / 103.6-105.2	———
WITH 1.438(36.5) DIA. CAPACITOR	———	———	1.969-2.031 / 50.0-51.6
WITH 4.875(123.8) LONG CAPACITOR	1.953-2.203 / 49.6-56.0	5.078-5.141 / 129.0-130.6	———
WITH 1.813(46.1) DIA. CAPACITOR	———	———	2.344-2.406 / 59.5-61.1

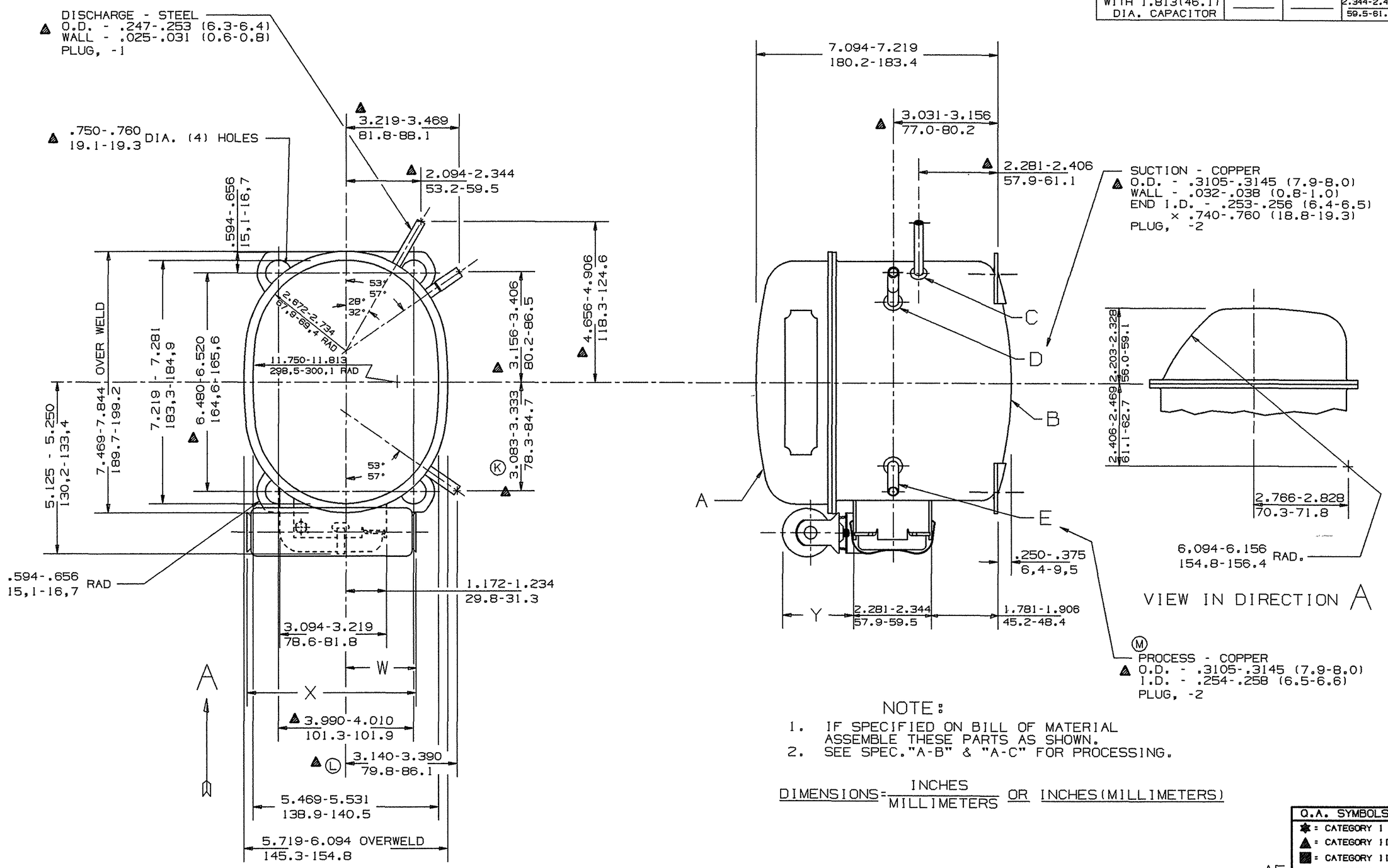

NOTE:

1. IF SPECIFIED ON BILL OF MATERIAL ASSEMBLE THESE PARTS AS SHOWN.
2. SEE SPEC."A-B" & "A-C" FOR PROCESSING.

DIMENSIONS = INCHES / MILLIMETERS OR INCHES(MILLIMETERS)

Q.A. SYMBOLS
✱ = CATEGORY I
▲ = CATEGORY II
■ = CATEGORY III
= CATEGORY IV

AE

A	32085
B	HA531
C	34373
D	34135
E	58073-5

LT	LC	CHANGE	DATE
N	—	Q.A. SYMBOLS & CHART ADDED #220704	HB 10/17/88
M	2 B	NOTE REVISED #219098	HB 5/9/89
L	6 B	WAS 3.031-3.281 (77.0-83.3) #218310	HB 9/24/88
K	5 D	WAS 3.031-3.281 (77.0-83.3) #218310	HB 9/24/88
J	-	REDRAWN NO CHANGE #212377	HB 4-17-86

THIS DRAWING OR PRINT (I) IS THE PROPERTY OF TECUMSEH PRODUCTS COMPANY AND CONTAINS PROPRIETARY AND CONFIDENTIAL INFORMATION BELONGING TO TECUMSEH, (II) WAS LOANED TO THE RECIPIENT ON THE EXPRESS AND IMPLIED CONDITION THAT THE RECIPIENT WILL NOT USE IT FOR THE INFORMATION CONTAINED THEREON OR DISCLOSE IT TO ANY OTHERS WITHOUT THE EXPRESS AND WRITTEN CONSENT OF THE PRESIDENT OF TECUMSEH AND THAT SUCH INFORMATION ON, AS EXPRESSLY AND SPECIFICALLY DESIGNATED BY TECUMSEH, (III) SHALL NOT AND NOT OTHERWISE BE USED IN ANY MANNER OR TO ANY EXTENT WITHOUT TECUMSEH'S PRIOR EXPRESS AND WRITTEN CONSENT, AND (IV) SHALL BE RETURNED BY THE RECIPIENT TO TECUMSEH UPON REQUEST OF THE LATTER'S REQUEST PROMPTLY AFTER SUCH REQUEST IS MADE.

DIS. CODE 34D

DO NOT SCALE THIS DRAWING. ALL FERROUS MATERIALS MUST NOT BE MAGNETIZED AS RECEIVED OR AT COMPONENT OR ASSEMBLY.

NAME: SALES COMPRESSOR

DWN. BRODERICK 4-17-86 | CK. M'TAUGHEY 1-3-90 | APR. BLANDEN | SCALE 1"=2"

THIS PRINT SUPERSEDES ALL PRINTS PRIOR TO

TECUMSEH PRODUCTS CO.
TECUMSEH, MICHIGAN

MATERIAL: NOTED

INTERNAL USE ONLY
©UGIDISK1:BRODERICK:AE-DCAE-165.REVN.PRT

PART NO. DCAE-165